Report ID: **SHARKS-02-03-01**
14-Jun-2007

Table of contents

1. **EP1116602(A1) - Method to make decorations on supports and device therefor**
2. **FR2676025(A1) - Method and device for automatically producing a mosaic**
3. **DE19514132(A1) - Mosaic image generation procedure for e.g. building, design and handicraft industries**
4. **DE4124049(A1) - Image reproduction system providing mosaic pattern - uses data obtained by scanning original image to control selection of mosaic stones**
5. **WO2006048915(A2) - AUTOMATIC SELECTING AND HANDLING DEVICE FOR ASSEMBLING MOSAIC-LIKE OBJECTS**
6. **US5913992(A) - Mosaic tile maker**
7. **ES2257961(A1) - Mosaic assembly method involves arranging and attaching together identified pieces of mosaic based on computed distribution of pieces to form mosaic**
8. **EP0829378(A2) - Method and apparatus for manufacturing a mosaic-type picture**

Publications

1. EP1116602(A1) - Method to make decorations on supports and device therefor

Publication Date: 18-Jul-2001
Inventors: DORAZI GILBERTO [IT]
Applicants: DORAZI GILBERTO [IT]

Abstract:

Method and device to achieve colored decorations (12) on supports (11), said decorations (12) reproducing a desired image and providing to deposit and attach a plurality of colored particles (13) onto the support (11) to be decorated, said method being performed automatically and providing at least the following steps: acquisition, cataloguing and memorization in a data bank of the chromatic and geometric characteristics of a plurality of colored particles (13) to be used to decorate the support (11); acquisition, registration, digitization and possible processing of an image to be reproduced on the support (11); recognition and chromatic cataloguing of the individual dots (pixels) which compose the digitized image (23); definition of a numeric-chromatic ratio of correspondence between the pixels of the digitized image (23) and the individual colored particles (13); selection, pick up and distribution on the support (11) of the colored particles (13) chosen according to said ratio of correspondence; process of attachment of the colored particles (13) to the support (11).

External Links & Translations: Google patents, Espacenet

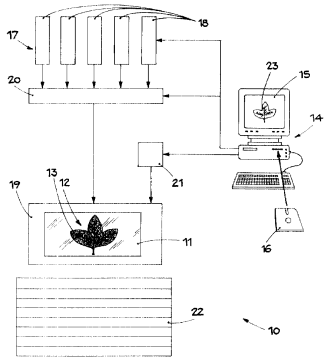

fig.2

2. FR2676025(A1) - Method and device for automatically producing a mosaic

Publication Date: 06-Nov-1992
Inventors: JEAN COTON
Applicants: COTON JEAN [FR]

Abstract:

The invention relates to a method for producing a mosaic from an image. The method consists in acquiring the shape, size and colour of elements intended to make up this mosaic, in splitting up the said image into a discontinuous system of dots which is dependent on the shape, size and colour of the said elements, in giving each of the said dots polar coordinates, in communicating the polar coordinates of these elements to a system for laying the said elements and in reconstructing the image, according to these polar coordinates, on a plane in the form of a mosaic. The invention also relates to a device for the implementation of this method.

External Links & Translations: Google, Espacenet

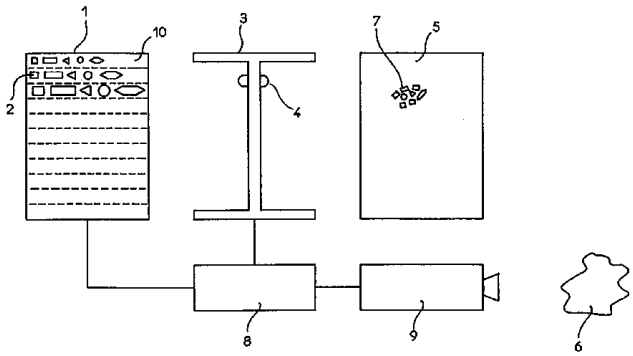

---

3. DE19514132(A1) - Mosaic image generation procedure for e.g. building, design and handicraft industries

Publication Date: 17-Oct-1996
Inventors: [illegible] [DE] COTTONE NORBERT DIPL ING [DE], VOLZ HANSJOERG DIPL ING [DE], LOEFFLER
Applicants: FRAUNHOFER GES FORSCHUNG [DE]

Abstract:

The image generation procedure produces a mosaic image (15) from a two- or three-dimensional pattern (6) using an image processing system (1). Data giving information about the image is processed in an electronic data processing system (2), which may be a personal computer, with a screen showing the pattern for the mosaic. The personal computer provides output information which is used to control one robot-type manual manipulator. The manual manipulator takes mosaic segments from a store (13) and places them on an associated support (14) in such a way that the colour of each segment is within the tolerance for that particular area of the image.

External Links & Translations: Google patents, Espacenet

4. DE4124049(A1) - Image reproduction system providing mosaic pattern - uses data obtained by scanning original image to control selection of mosaic stones

Publication Date: 29-Oct-1992
Inventors: KRATZL RUDOLF DIPL ING [DE]
Applicants: KRATZL RUDOLF DIPL ING [DE]

Abstract:

The image reproduction system provides data representing the image used to select the mosaic stones for the mosaic pattern. The data is obtained by scanning the original image and is entered in a data memory which is subsequently addressed, to control selection of the mosaic stones. The original image is scanned via an optical scanner (14) coupled to a video processor (15). The latter provides data relating to the position, colour and size of individual image areas and the relative spacing between the latter. USE - For formation of mosaic applied to floor or wall.

External Links & Translations: Google patents, Espacenet

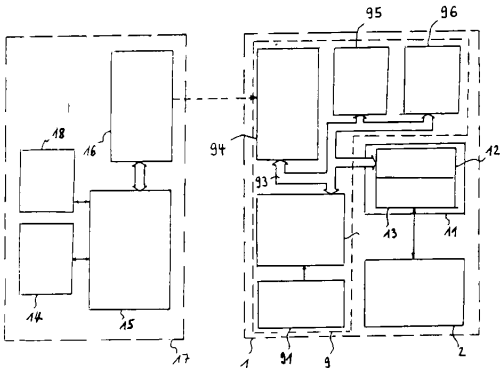

5. WO2006048915(A2) - AUTOMATIC SELECTING AND HANDLING DEVICE FOR ASSEMBLING MOSAIC-LIKE OBJECTS

Publication Date: 11-May-2006
Inventors: TAIETTA MARCO [IT]
Applicants: TAIETTA MARCO [IT]

Abstract:

An automatic selecting and handling device for assembling mosaic-like objects, comprising a load-bearing frame on which there is a beam (12) designed to support a carriage (13) on which an operating head (14) operates, wherein the operating head (14) is located on a shaft (14') and comprises two or more sets of pneumatic suction cups supplied by independent pneumatic distributors two or more sets of pneumatic suction cups supplied by independent pneumatic distributors which allow a vacuum to be supplied to each suction cup line, and wherein each line is controlled by a solenoid valve located on the carriage (13) board.; The head (14) can perform angular rotations on its shaft (14') to move from a substantially horizontal position opposite the tesserae arriving from the supply unit (15) to a vertical position pointing downwards and towards the zone for placing on the lower assembly collection tray (11).

External Links & Translations: Google patents, Espacenet

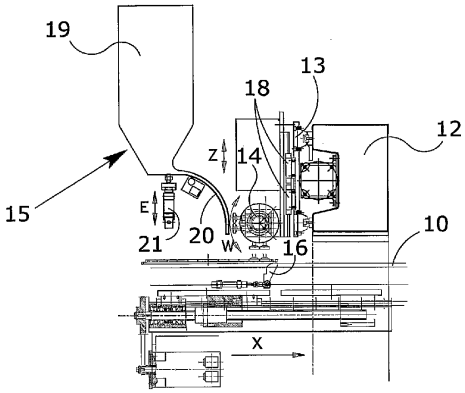

6. US5913992(A) - Mosaic tile maker

Publication Date: 22-Jun-1999
Inventors: GERBER DAVID J [US]
Applicants: GERBER SCIENT PRODUCTS INC [US]

Abstract:

An apparatus for automatically creating a simulated mosaic controllably discharges tile pieces onto plate material and secures the tile pieces in place such that the plates with the tile pieces are freestanding permitting the plates themselves to be an ordered arrangement of sections of the mosaic once cemented to the substrate. Many different forms may be had for the plate material, including ones that are pressure or heat activatable to bond with the tile pieces or ones that are mechanically connectable.

External Links & Translations: Google patents, Espacenet

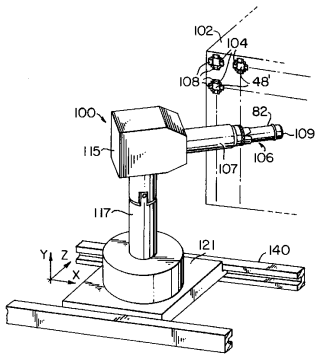

---

7. ES2257961(A1) - Mosaic assembly method involves arranging and attaching together identified pieces of mosaic based on computed distribution of pieces to form mosaic

Publication Date: 01-Aug-2006
Inventors: RUIZ SELAS ANTONIO [ES]
Applicants: CONSTRUCCIONES Y APLICACIONES [ES]

Abstract:

The method involves identifying the shapes of the pieces for forming a mosaic using an automatic image identification unit, and using a calculating system to compute the distribution of the pieces to form the mosaic. The pieces are arranged and attached together using an automatic transferring and attachment unit and based on the computation results of the calculating system.

External Links & Translations: Google, Espacenet

8. EP0829378(A2) - Method and apparatus for manufacturing a mosaic-type picture

Publication Date: 18-Mar-1998
Inventors: MORITO YUHKOH [JP]
Applicants: MORITEX CORP [JP]

Abstract:

A method of manufacturing a bead-inlaid picture by inputting a desired original image as a motif for a bead-inlaid picture by an image input device, dividing the inputted original image into each of pieces in a size equal with that of a bead, comparing numerical data for the hue and the brightness obtained for each of the pieces and numerical data for the hue and the brightness predetermined for each of the beads and replacing the numerical data for each of the pieces with a color code allocated to a bead having numerical data most approximate with the obtained data and outputting signals corresponding thereto by an image processing device, feeding beads allocated with color codes while dividing them on every color codes by a feeder, arranging the thus fed beads in accordance with the arranged sequence for each of the pieces in the original image by an actuator and, fusing the arranged beads on a glass plate. A bead-inlaid picture can be manufactured just in accordance with the original image at high quality and at a reduced cost quite automatically without requiring any particular skill.

External Links & Translations: Google patents, Espacenet

F I G. 1

