Report ID: **SHARKS-02-02-01**
07-Jun-2007

Table of contents

1. **US2006267940(A1) - Integration of navigation device functionality into handheld devices**
2. **US2006262096(A1) - Optical mouse/barcode scanner built into cellular telephone**
3. **GB2416825(A) - Mobile phone with an optical sensor and buttons for use as a computer mouse**

Publications

1. US2006267940(A1) - Integration of navigation device functionality into handheld devices

Publication Date: 30-Nov-2006
Inventors: GROOM DAVID J [US], SIDDIQUI KABIR [US], BROWN SHAWN M [US]
Applicants: MICROSOFT CORP [US]

Abstract:

A system that integrates navigational device (e.g., mouse) functionality into a cellular telephone or other handheld device (e.g., personal organizer, personal media player). A device can employ existing optics from an image capture device (e.g., camera) as the optics for the mouse. A mouse engine can receive an input from the optics and route the input via a Bluetooth(TM), or other existing connection (e.g., wired or wireless) to transfer the mouse coordinates to a desktop. In another example, a device can employ a touch sensitive pad to supply motion input to a mouse engine. Further, a device (e.g., personal organizer, pocket personal computer) can utilize an existing touch screen as a touch sensitive input to a mouse engine. A laser pointer can be integrated into a device thereby enabling presenters to use the device to point to slides and other target visuals.

External Links & Translations: Google patents, Espacenet

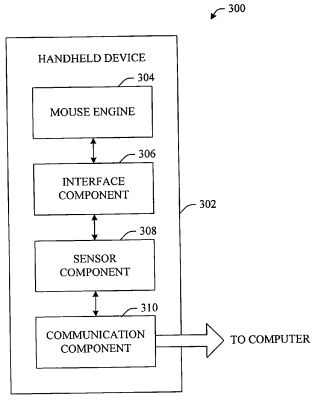

2. US2006262096(A1) - Optical mouse/barcode scanner built into cellular telephone

Publication Date: 23-Nov-2006
Inventors: PANABAKER RUSTON J D [US], WESTERINEN WILLIAM J [US]
Applicants: MICROSOFT CORP [US]

Abstract:

A cellular telephone having an optical mouse component built into the telephone. The telephone is adapted to track when it was turned ON and placed on a suitable surface. The top of the telephone includes two buttons which are used as "left click" and "right click" buttons while the mouse optics are in use. These buttons could be used for other functions when the mouse optics were not in use. The telephone communicates with a user's laptop in any number of ways including being paired to it through Bluetooth or by being physically connected using USB. The same optics used for the mouse component are capable of scanning coded symbols and barcodes. Users can scan nearly any item and retrieve information from a locally stored database or from a network. Users can also scan unique IDs from phonecards or other references which cause action such as loading more minutes onto the phone, downloading other information or sending of information from the phone to take part in a transaction.

External Links & Translations: Google patents, Espacenet

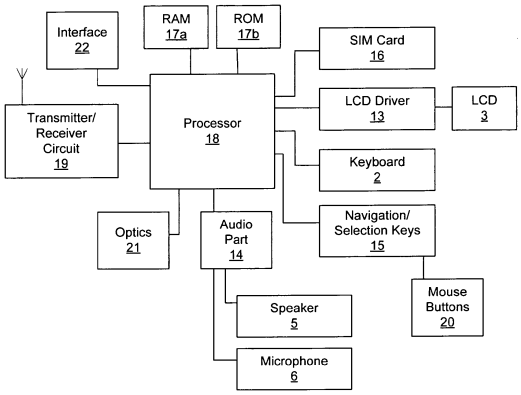

3. GB2416825(A) - Mobile phone with an optical sensor and buttons for use as a computer mouse

Publication Date: 08-Feb-2006
Inventors: BEGG CHRIS [GB]
Applicants: BEGG CHRIS [GB]

Abstract:

A mobile phone and pointing device has mouse control buttons 1,2 on a back panel, and optical laser sensor 3 for cursor control on the front. Functions of the device are activated or inhibited when the device is in 'phone' or 'mouse' modes. The device can use a radio frequency standard, such as Bluetooth, to pair itself with and communicate with a computer.

External Links & Translations: Google, Espacenet

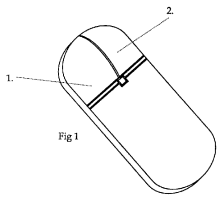

Fig 1

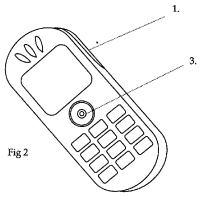

Fig 2